# Energy Storage System (∨A0)

## Drawing list

| Page | Drawing name |
|---|---|
| 1 | DC side electrical main circuit diagram of energy storage system cabinet |
| 2 | AC side electrical main circuit diagram of energy storage system cabinet |
| 3 | Dimensional drawing of energy storage system cabinet |
| 4 | Infrastructure drawing of energy storage system cabinet |
| 5 | Cooling direction of battery cabinet |
| 6 | Energy storage system wiring diagram |

| Mark | Number of places | Version | Change content | Modified by | Date |
|---|---|---|---|---|---|
| | | | | | |
| | | | | | |
| | | | | | |

| | | | | | | | |
|---|---|---|---|---|---|---|---|
| Part name | Previous page | Material No. | / | Drawing No. | FLEX-215A05/M15P100 | Version | V1.0 |
| Material | / | Product model | / | View | Unit mm | Proportion | / |
| Design | Liang Baoquan | Drawing review | Wang Le | Page 1 of 1 | | Specification | A4 |
| Check | Wang Le | Ratify | Zhang Xin | Poweroad Renewable Energy Co., Ltd. | | | |

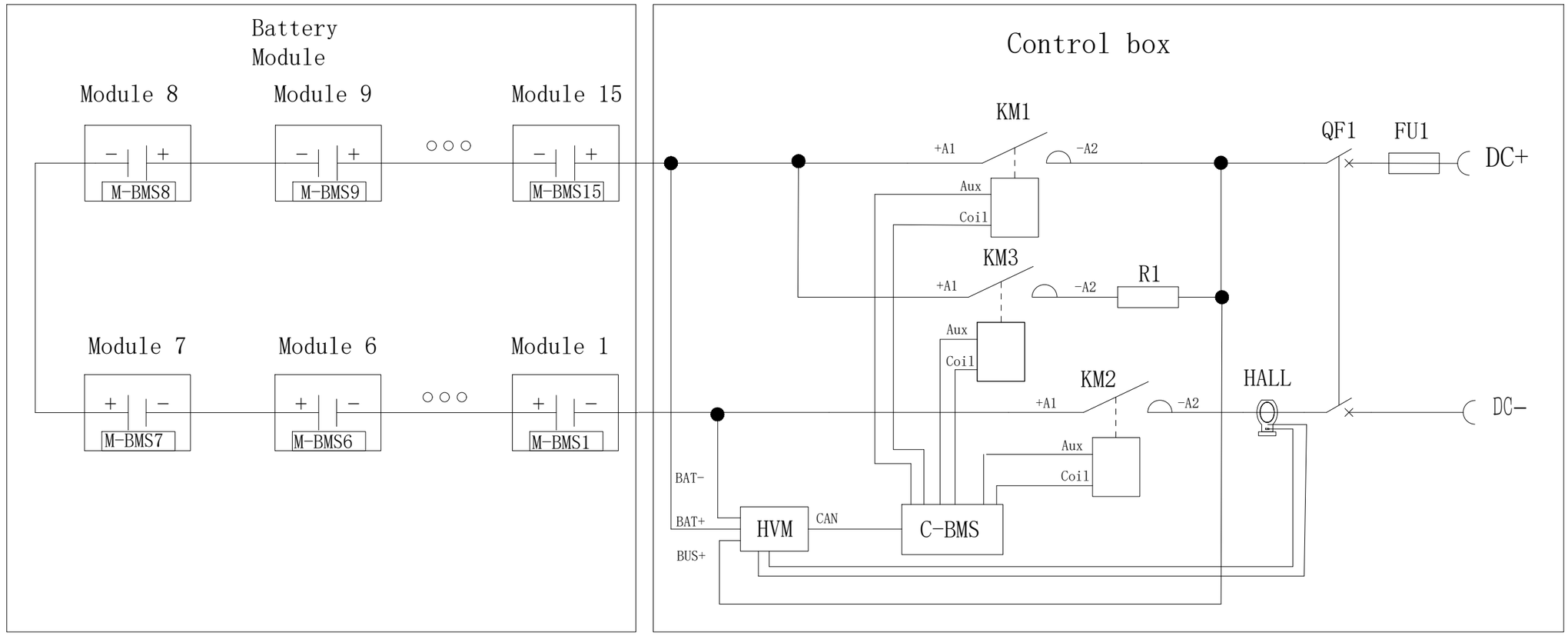


| | | | | | |
|---|---|---|---|---|---|
| | | | | | |
| | | | | | |
| | | | | | |
| Mark | Number of places | Version | Change content | Modified by | Date |

| | | | | | | | |
|---|---|---|---|---|---|---|---|
| Part name | DC side electrical main circuit diagram of energy storage system cabinet | Material No. | / | Drawing No. | FLEX-215A05/M15P100 | Version | V1.0 |
| Material | / | Product model | / | View | Unit: mm | Proportion | / |
| Design | Liang Baoquan | Drawing review | Wang Le | Page 1 of 1 | | Specification | A4 |
| Check | Wang Le | Ratify | Zhang Xin | Poweroad Renewable Energy Co., Ltd. | | | |

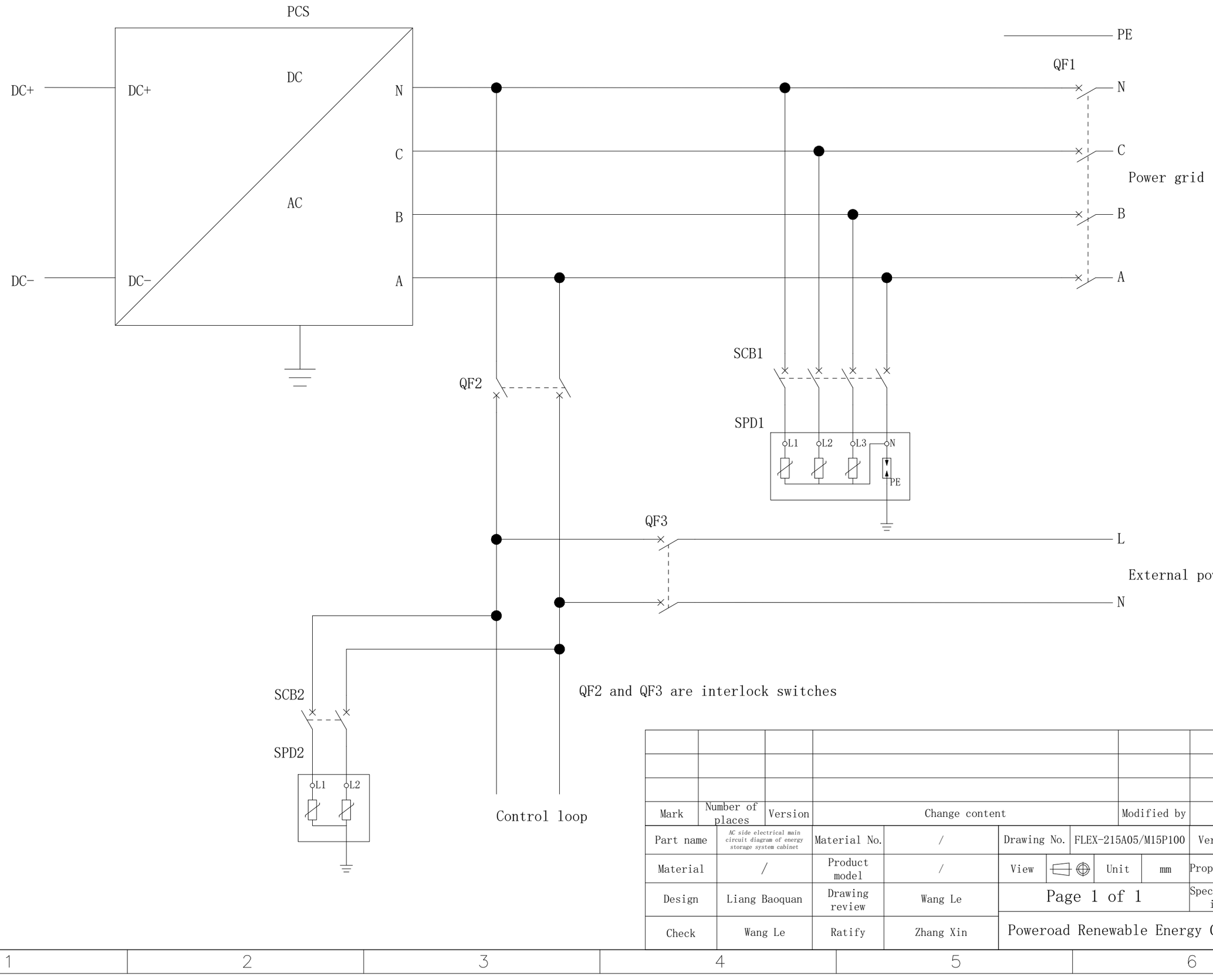


| Mark | Number of places | Version | Change content | Modified by | Date |
|---|---|---|---|---|---|
| | | | | | |
| | | | | | |
| | | | | | |

| | | | | | | | |
|---|---|---|---|---|---|---|---|
| Part name | AC side electrical main circuit diagram of energy storage system cabinet | Material No. | / | Drawing No. | FLEX-215A05/M15P100 | Version | V1.0 |
| Material | / | Product model | / | View | Unit mm | Proportion | / |
| Design | Liang Baoquan | Drawing review | Wang Le | Page 1 of 1 | | Specification | A4 |
| Check | Wang Le | Ratify | Zhang Xin | Poweroad Renewable Energy Co., Ltd. | | | |

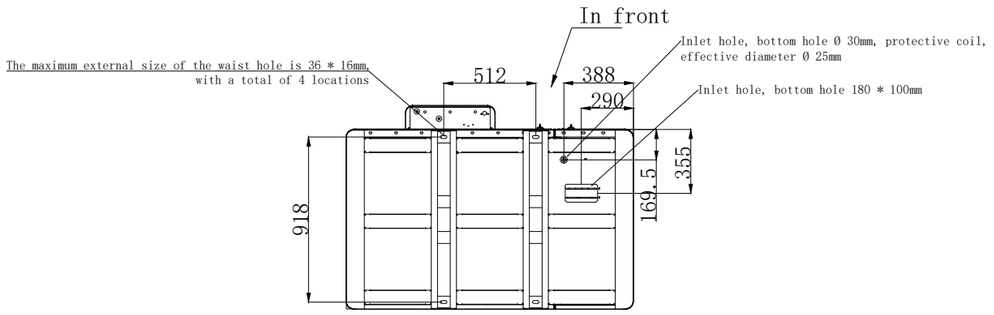


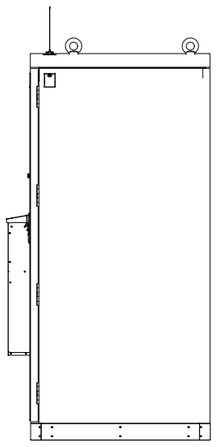

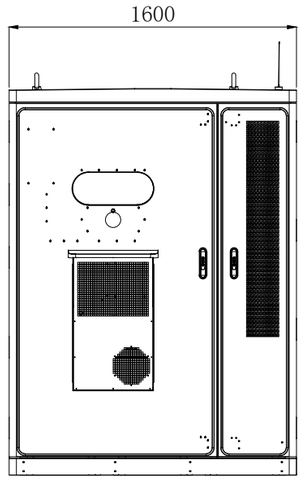


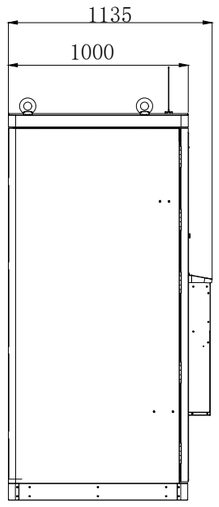


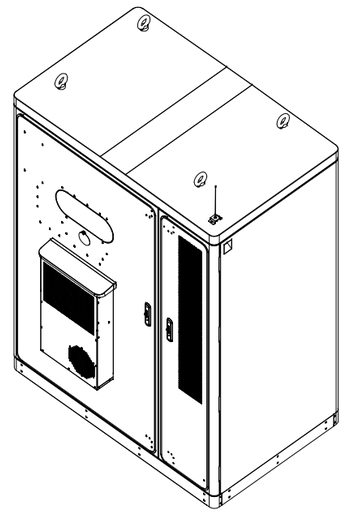

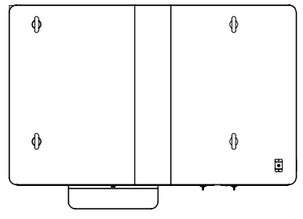

| | | | | | | | |
|---|---|---|---|---|---|---|---|
| | | | | | | | |
| | | | | | | | |
| | | | | | | | |
| Mark | Number of places | Version | Change content | | | Modified by | Date |
| Part name | Dimensional drawing of energy storage system cabinet | | Material No. | / | Drawing No. | FLEX-215A05/M15P100 | Version V1.0 |
| Material | / | | Product model | / | View | Unit mm | Proportion / |
| Design | Zhang Huiwen | | Drawing review | Wang Le | Page 1 of 1 | | Specification A4 |
| Check | Wang Le | | Ratify | Zhang Xin | Poweroad Renewable Energy Co., Ltd. | | |

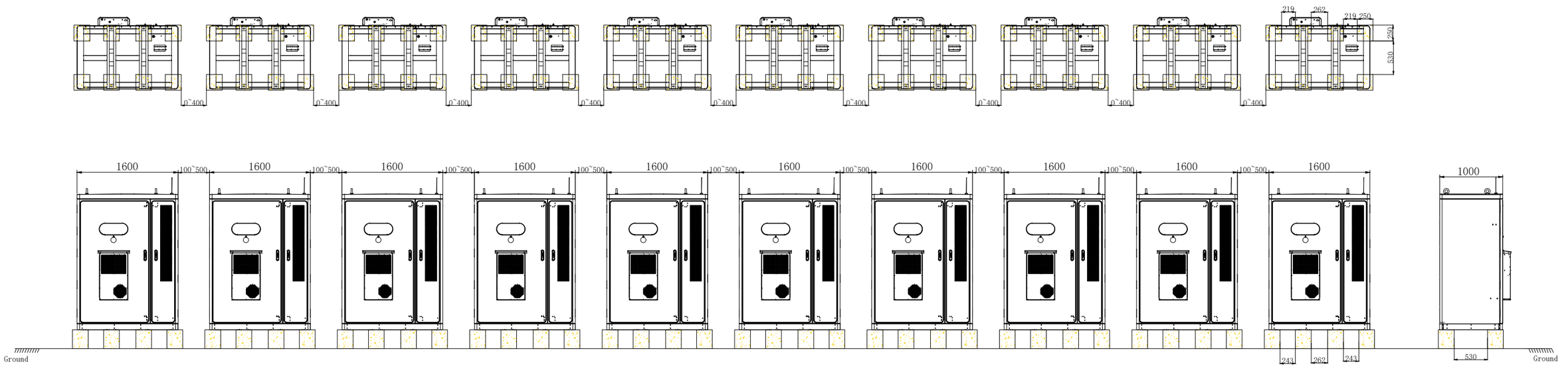


Explain:

1. When excavating a foundation pit, it is necessary to carry out soil consolidation and wet and loose soil reinforcement treatment.

The foundation construction site should be selected at the highest point of the surrounding terrain to prevent damage caused by water accumulation;

2. The installation pier shall be made of reinforced concrete, and the bottom load of the installation pier foundation shall not be less than 2000kg/square meter;

3. The grounding main line and grounding electrode are made according to the conventional grounding grid of the substation, with a grounding resistance of less than 4 Ω. It is recommended to use 50 * 4 galvanized flat steel for production,
Form a grounding grid, with the length determined according to the site conditions, along the cable trench and pre embedded galvanized flat steel;

4. The production of PVC (≥ Ø 150) for incoming and outgoing cable conduits shall be determined by the actual situation on site;

5. It is recommended to use expansion bolts, M12 * 100mm, for fixing the cabinet and foundation;

6. The basic surface should be leveled with a ruler to ensure levelness;

7. The bottom plane of the foundation should be slightly inclined towards the sump;

8. This image is for reference only.

| Mark | Number of places | Version | Change content | Modified by | Date |
|---|---|---|---|---|---|
| | | | | | |
| | | | | | |
| | | | | | |

| | | | | | | | |
|---|---|---|---|---|---|---|---|
| Part name | Infrastructure drawing of energy storage system cabinet | Material No. | / | Drawing No. | FLEX-215A05/M15P100 | Version | V1.0 |
| Material | / | Product model | / | View | Unit mm | Proportion | / |
| Design | Zhang Huiwen | Drawing review | Wang Le | Page 1 of 1 | | Specification | A4 |
| Check | Wang Le | Ratify | Zhang Xin | Poweroad Renewable Energy Co., Ltd. | | | |

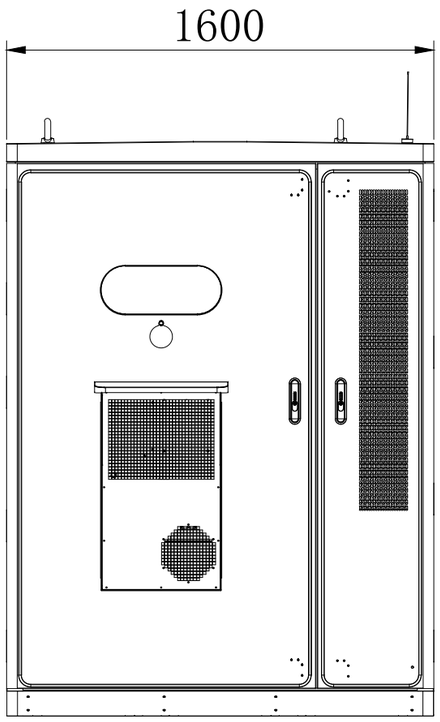


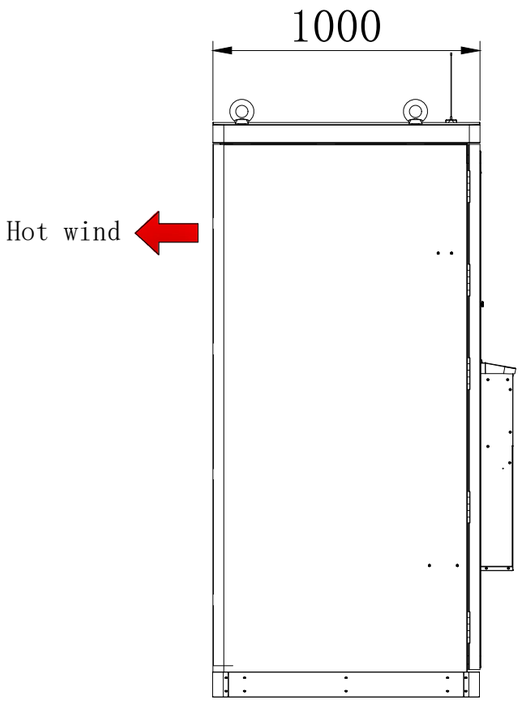


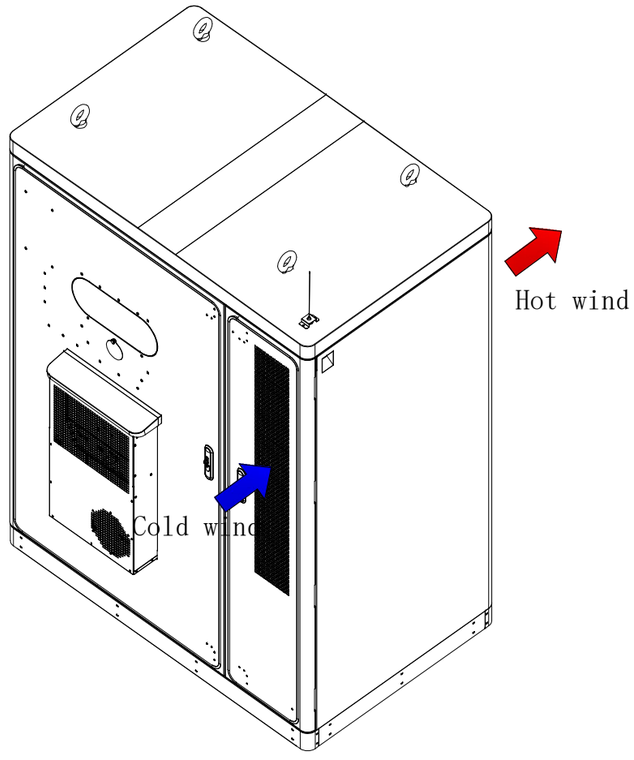


| Mark | Number of places | Version | Change content | Modified by | Date |
|---|---|---|---|---|---|
| | | | | | |
| | | | | | |
| | | | | | |

| | | | | | | | |
|---|---|---|---|---|---|---|---|
| Part name | Cooling direction of battery cabinet | Material No. | / | Drawing No. | FLEX-215A05 /M15P100 | Version | V1.0 |
| Material | / | Product model | / | View | Unit mm | Proportion | / |
| Design | Zhang Huiwen | Drawing review | Wang Le | Page 1 of 1 | | Specification | A4 |
| Check | Wang Le | Ratify | Zhang Xin | Poweroad Renewable Energy Co., Ltd. | | | |

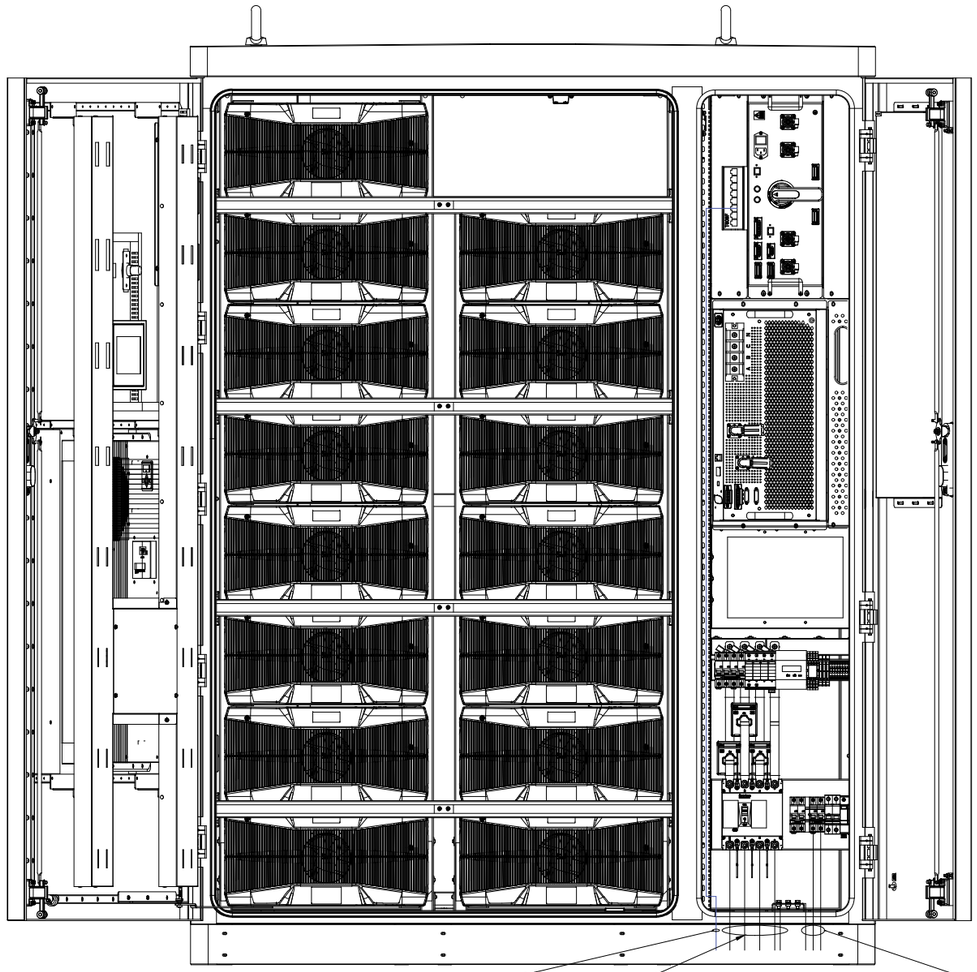

Ethernet communication

AC-A input line
AC-B input line
AC-C input line
AC-N input line
PE input line

L INPUT
N INPUT
PE INPUT

| Wire cable | | recommended wire dianmeter (mm²) | Notes |
|---|---|---|---|
| AC input | AC-U LINE | 70 | |
| | AC-V LINE | 70 | |
| | AC-W LINE | 70 | |
| | N LINE | 70 | |
| | PE LINE | 35 | |
| control loop | L INPUT | 1.5 | |
| | N INPUT | 1.5 | |
| | PE INPUT | 1.5 | |
| Communication | Ethernet communication | CAT5, shield straight network cable*5 | |

| Mark | Number of places | Version | Change content | Modified by | Date |
|---|---|---|---|---|---|
| | | | | | |
| | | | | | |
| | | | | | |

| | | | | | | | |
|---|---|---|---|---|---|---|---|
| Part name | Energy storage system wiring diagram | Material No. | / | Drawing No. | FLEX-215A05/M15P100 | Version | V1.0 |
| Material | / | Product model | / | Unit | Unit mm | Proportion | / |
| Design | Zhang Huiwen | Drawing review | Wang Le | Page 1 of 1 | | Specification | A4 |
| Check | Wang Le | Ratify | Zhang Xin | Poweroad Renewable Energy Co., Ltd. | | | |