SoliTek

# Blackstar

455 W

Made in the EU

2+2 mm glass

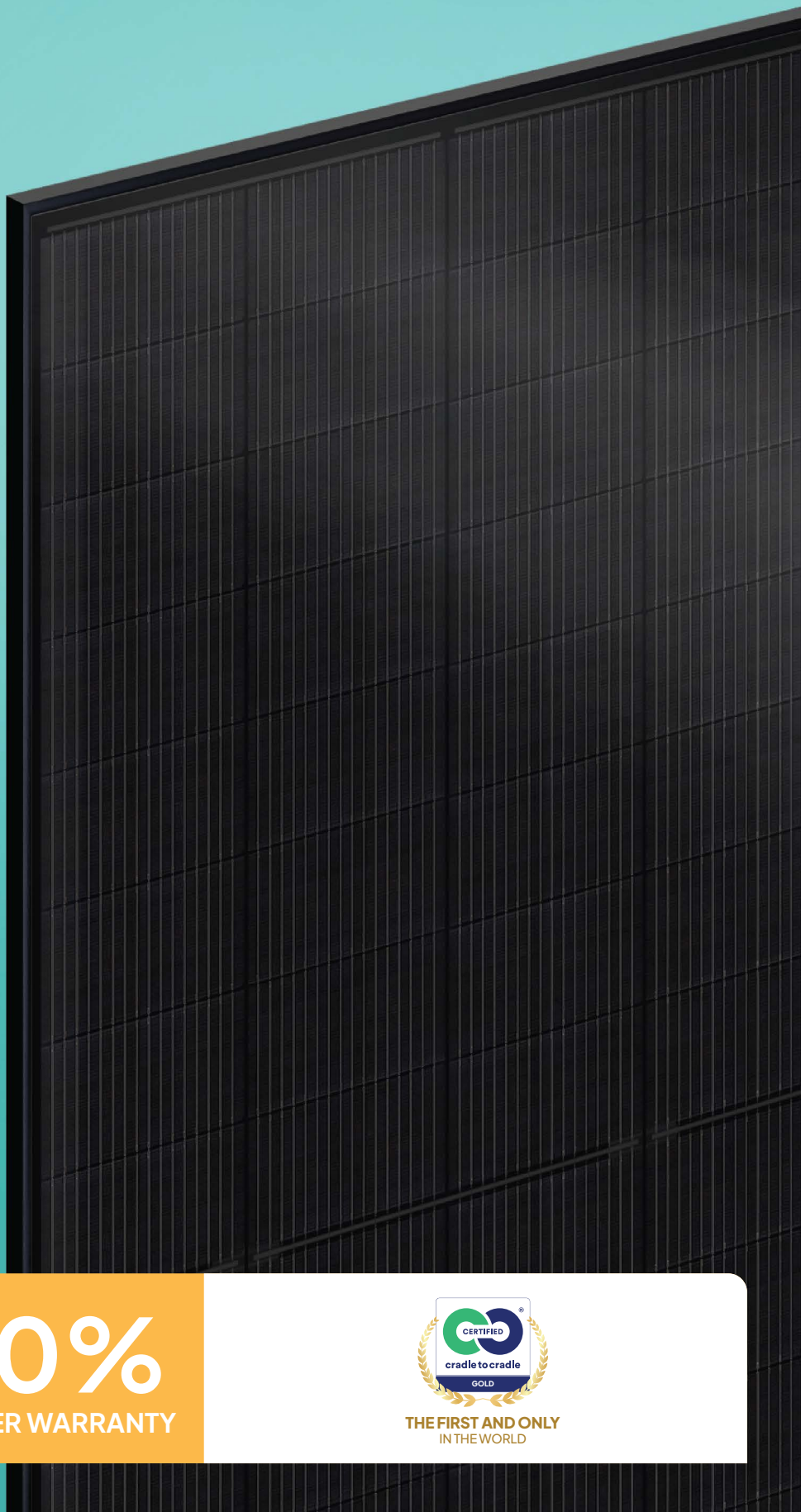

Fire class A

8 100 Pa
Extreme load resistance

$NH_3$
Ammonia resistance

30 mm
Hail resistance class 3

98,8 %
98,8 % recyclable

GL 35 %
35% of recycled glass content

**30** YEAR Product & Efficiency Guarantee

**90%** POWER WARRANTY

CERTIFIED cradle to cradle GOLD

THE FIRST AND ONLY IN THE WORLD

## Electrical data (STC*)

| | |
|---|---|
| Maximum power (W) | 455 |
| Cell technology | N type, TOPCon - bifacial |
| Open circuit voltage ($V_{OC}$/V) | 34,82 |
| Short circuit current ($I_{SC}$/A) | 15,97 |
| Max power voltage (Vmpp/V) | 29,71 |
| Max power current (Impp/A) | 15,31 |
| Module efficiency (n) | 22,77 % |
| Max system voltage (V) | 1500 |
| Max current (A) | 30 |
| Power tolerance | 0/+5W |

*Under standard test conditions (STC) of irradiance of 1000W/sq.m., spectrum AM 1.5 and cell temperature of 25°C. Flash testing measurment accuracy of +/-5%.

## Warranty

| | |
|---|---|
| 30 years product warranty | |
| 30 years efficiency warranty | |
| First year degradation (%) | 1 |
| Annual degradation (%) | 0,31 |
| Power in year 30 (%) | 90 |

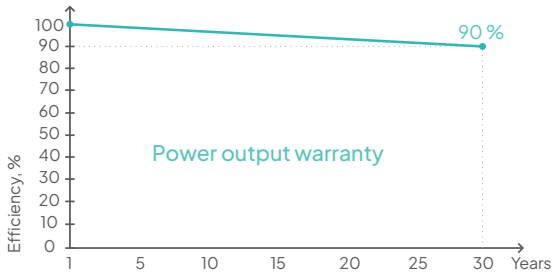


## Certifications

| | |
|---|---|
| IEC 61215:2021; IEC 61730:2023 | |
| Cradle to Cradle (C2C) | Gold level |
| IEC 62716:2013 | Ammonia corrosion testing |
| IEC 61701:2020 | Salt mist corrosion testing |
| IEC 61215-2:2021 | 30 mm hailstone - Hail resistance class 3 (HW3) |
| ISO 9001:2015 | Quality management systems |
| ISO 14001:2015 | Environmental management systems |
| ISO 45001:2018 | Occupational health and safety |
| SundaHus | A level assessment |
| Produced using 100% renewable energy | |
| Membership at Svensk Solenergi | |

Product assessed in SundaHus Material Data

PRODUCED USING 100% RENEWABLE ENERGY

Svensk Solenergi

## Temperature ratings

| | |
|---|---|
| Current temperature coefficient (α) | +0,045% / °C |
| Voltage temperature coefficient (β) | -0,250% / °C |
| Power temperature coefficient (δ) | -0,300% / °C |
| Nominal operating module temperature | 46 °C |

## Mechanical data

| | |
|---|---|
| Dimensions (LxWxH) (mm) | 1762x1134x30 |
| Weight (kg) | 25,5 |
| Front glass (mm) | 2, structured, low reflection, with AR coating |
| Back glass (mm) | 2, black |
| Cell Size (mm) | 182,2x105 |
| Busbars | 16 |
| Cell configuration | 6x16 |
| Frame | Black anodized aluminium frame |
| Rated operating altitude (m) | Up to 2000 |
| Operating temperature (°C) | -40 ÷ +85 |
| Maximum test load (wind/snow) (Pa) | 3600/8100 |
| Junction box / IP class | Split junction box / IP68 |
| Cable cross section size (mm²) | 4 |
| Cable length (m) | 1,2 |
| Bypass diodes | 3 |
| Connector | MC4-EVO2 |

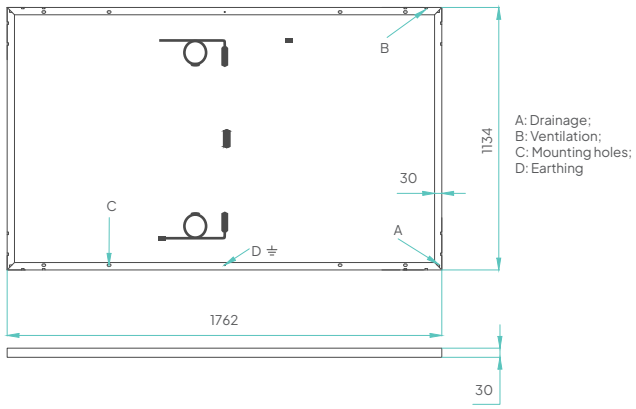


## Packing information

| | |
|---|---|
| Modules per pallet (pcs) | 33 |
| Dimensions of a pallet (LxWxH) (mm) | 1854x1205x1219 |
| Weight of a pallet (gross) (kg) | 889 |
| Pallets per 13,6 m truck (pcs) | 27 |
| Modules per 13,6 m truck (pcs) | 891 |

SoliTek

This datasheet is not legally binding. The manufacturer reserves the right to make changes to product specifications and / or product features without prior notice. The most recent versions of all documents (T&C's, datasheets, warranties and installation manuals) can always be found on our website at www.solitek.eu

QRious?

Scan to learn more